PRODUCT INFORMATION

ZETA STAINLESS

8671UFX160P63

EAN 4031582313673

BETTER MOBILITY. BETTER LIFE.



Image may differ from the original product

PERFORMANCE

Roll Performance	●●●●●
Movement Noise	●●●●●
Attrition	●●●○○
Corrosion Resistance	●●●●●

CORE ATTRIBUTES

Product Name	Zeta stainless
Type	Swivel castor with directional lock
Standard	EN12533 - Heavy Duty Castors
Load capacity at 4 km/h	300 kg
Load capacity at 6 km/h	240 kg
Electric Conductive	No
Stainless	Yes
Load capacity Static	600 kg
Temperature range (Minimum)	-20 °C
Temperature range (Maximum)	85 °C
Overall Height	200 mm
Overall width	96 mm
Overall weight	3.1 kg

HOUSING

Housing Material	Stainless steel, heavy
Fork shape	Broad, reinforced
Swivel Bearing	Two ball races
Housing Color	Stainless steel
Offset	55 mm
Swivel radius	135 mm
Swivel interference	270 mm
Dome diameter	96 mm

WHEEL

Tread hardness	soft
Body material	Polyamide
Tread Material Mix	Elastic tire, non-marking, vulcanized
Bearing	Precision ball bearing, sealed
Axle	Screwed with nut
Wheel Color	Grey / non marking
Threadguards	With threadguard
Diameter	160 mm
Tread width	46 mm
Body width	46 mm
Hardness of tread (A)	64 Shore A

FITTING

Fitting type	Medium rectangular plate
Plate length	137 mm
Plate width	105 mm
Plate hole length (Minimum)	74 mm
Plate hole length (Maximum)	80 mm
Plate hole width (Minimum)	74 mm
Plate hole width (Maximum)	105 mm
Plate hole diameter	11 mm

© Copyright 2026 TENTE International GmbH

ZETA STAINLESS

8671UFX160P63

EAN 4031582313673

Order number 00829526

Product Drawings

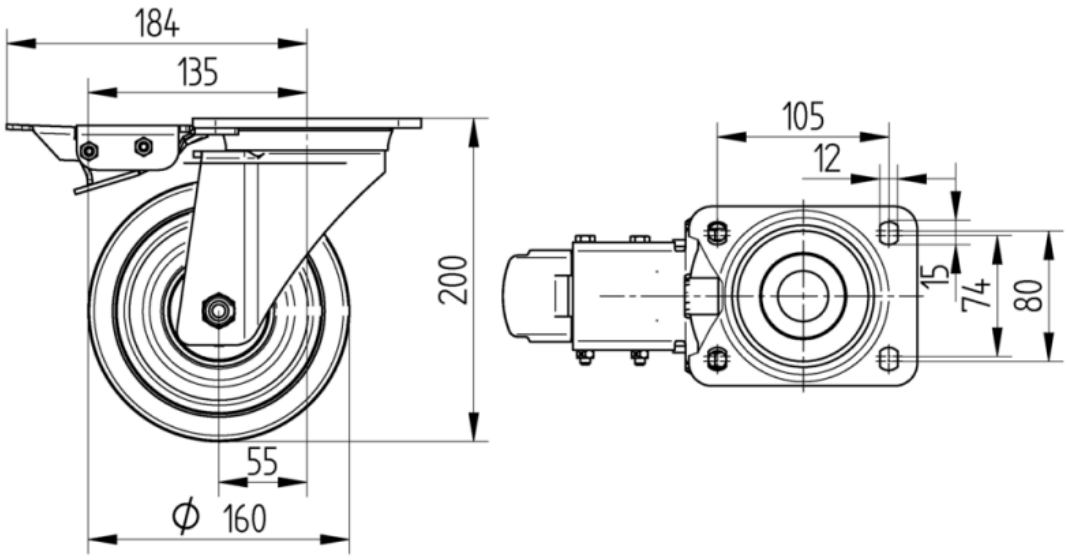

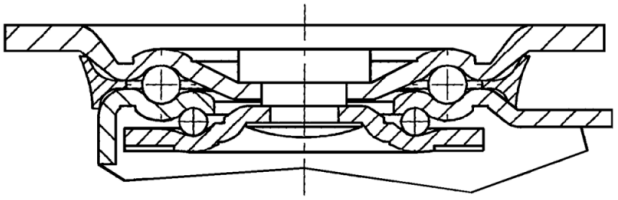

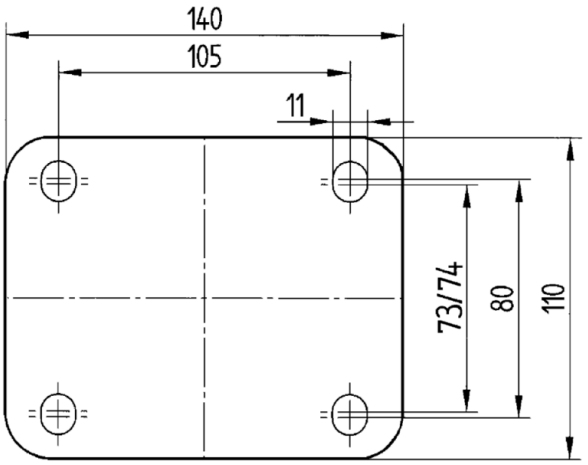

© Copyright 2026 TENTE International GmbH