PRODUCT INFORMATION

# ZETA

## 4681UOP250P63

EAN 4031582308105



Image may differ from the original product

### PERFORMANCE

| | |
|---|---|
| Roll Performance | ●●●○○ |
| Movement Noise | ●●●○○ |
| Attrition | ●●●●○ |
| Corrosion Resistance | ●●●○○ |

### CORE ATTRIBUTES

| | |
|---|---|
| Product Name | Zeta |
| Type | Swivel castor with directional lock |
| Standard | EN12532 - Transport Equipment |
| Load capacity at 4 km/h | 800 kg |
| Load capacity at 6 km/h | 640 kg |
| Electric Conductive | No |
| Stainless | No |
| Load capacity Static | 1600 kg |
| Temperature range (Minimum) | -30 °C |
| Temperature range (Maximum) | 80 °C |
| Overall Height | 290 mm |
| Overall width | 96 mm |
| Overall weight | 3.73 kg |

### HOUSING

| | |
|---|---|
| Housing Material | Steel sheet, very heavy |
| Fork shape | Broad, reinforced |
| Swivel Bearing | Two ball races, reinforced or stainless |
| Housing Color | Blue passivated |
| Offset | 55 mm |
| Swivel interference | 230 mm |
| Dome diameter | 96 mm |

### WHEEL

| | |
|---|---|
| Body material | Polyamide |
| Tread Material Mix | Identical with wheel body |
| Bearing | Precision ball bearing |
| Axle | Screwed with nut |
| Wheel Color | Natural white |
| Threadguards | With threadguard |
| Diameter | 250 mm |
| Tread width | 50 mm |
| Body width | 50 mm |
| Hardness of tread (D) | 75 Shore D |

### FITTING

| | |
|---|---|
| Fitting type | Medium rectangular plate |
| Plate length | 137 mm |
| Plate width | 105 mm |
| Plate hole length (Minimum) | 75 mm |
| Plate hole length (Maximum) | 80 mm |
| Plate hole width (Minimum) | 75 mm |
| Plate hole width (Maximum) | 105 mm |
| Plate hole diameter | 11 mm |

© Copyright 2026 TENTE International GmbH

# ZETA

4681UOP250P63

EAN 4031582308105

Order number 00830081

**Product Drawings**

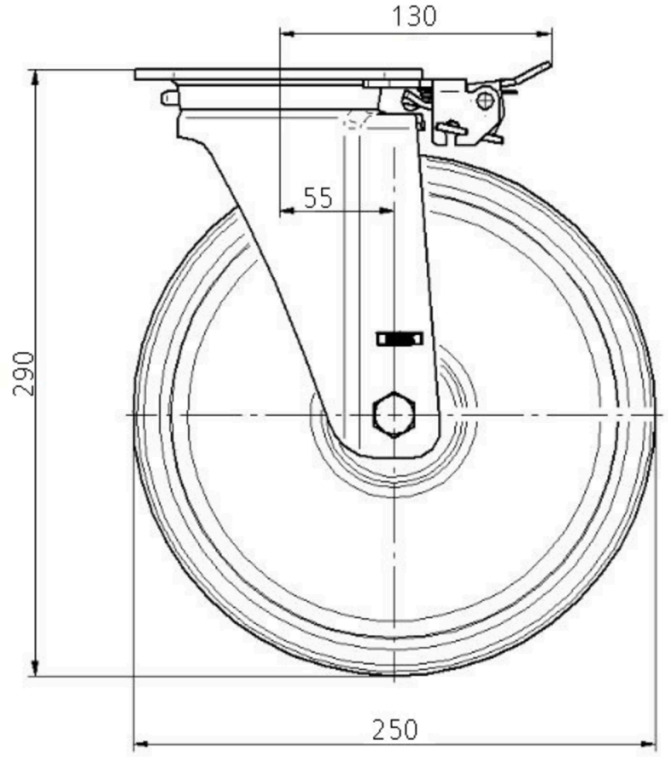


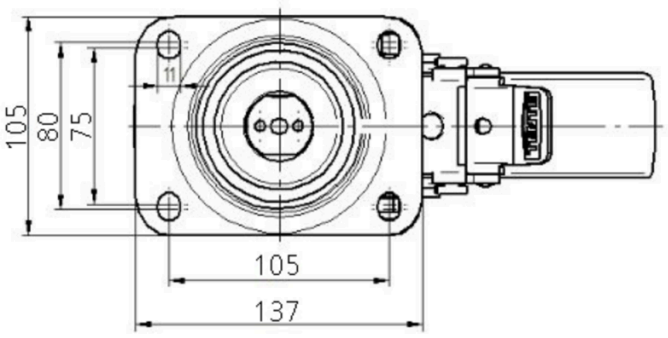


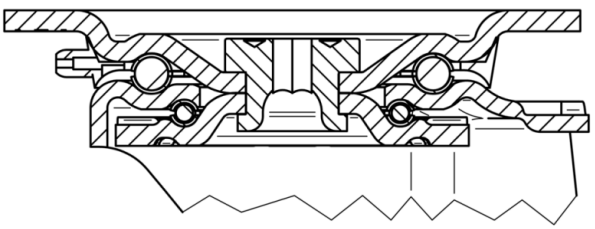

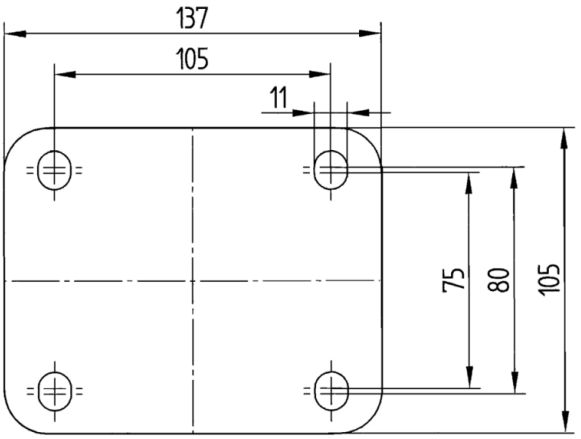


© Copyright 2026 TENTE International GmbH