PRODUCT INFORMATION

LUMINA

AA25PJI050B10-11x20/8

EAN 4031582457797

BETTER MOBILITY. BETTER LIFE.



Image may differ from the original product

PERFORMANCE

Roll Performance	●●●○○
Movement Noise	●●●○○
Attrition	●●●○○
Corrosion Resistance	●●●○○

CORE ATTRIBUTES

Product Name	Lumina
Type	Swivel castor with wheel brake
Standard	EN12528 - Furniture Castors
Load capacity at 3 km/h	40 kg
Electric Conductive	No
Stainless	No
Load capacity Static	80 kg
Temperature range (Minimum)	-10 °C
Temperature range (Maximum)	40 °C
Overall Height	58 mm
Overall width	55 mm
Overall weight	0.09 kg

HOUSING

Housing Material	Polypropylene
Fork shape	Twin wheel housing, closed
Swivel Bearing	Stem, swiveling
Swivel radius	63 mm
Swivel interference	126 mm

WHEEL

Body material	Polypropylene
Tread Material Mix	Thermoplastic rubber
Bearing	Plain bearing with spacer tube
Axle	Riveted
Threadguards	Without threadguard
Diameter	50 mm
Tread width	10 mm
Hardness of tread (A)	87 Shore A

FITTING

Fitting type	Stem with grip ring, with collar
Stem diameter	11 mm

© Copyright 2026 TENTE International GmbH

LUMINA

AA25PJI050B10-11x20/8

EAN 4031582457797

BETTER MOBILITY. BETTER LIFE.

Product Drawings

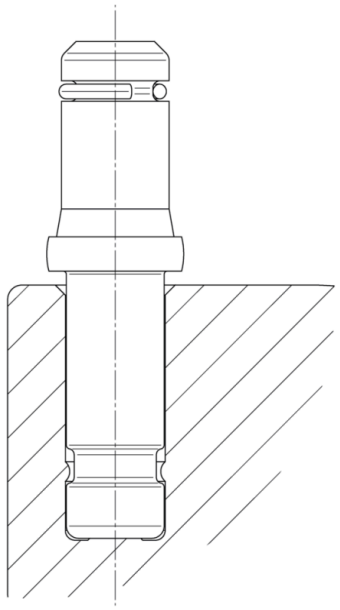

© Copyright 2026 TENTE International GmbH