PRODUCT INFORMATION

MAXTECH

UAR 125x38-Ø12

EAN 4031582323160



Image may differ from the original product

WHEEL

Body material	Polyamide
Tread Material Mix	Polyurethane, injected
Bearing	Roller bearing
Wheel Color	Blue grey (RAL7031)
Threadguards	Without threadguard
Diameter	125 mm
Tread width	38 mm
Axle Hole Diameter	12 mm
Hub Length	44.4 mm
Body width	38 mm
Hardness of tread (A)	92 Shore A
Hardness of tread (D)	42 Shore D

PERFORMANCE

Roll Performance	●●●○○
Movement Noise	●●●○○
Attrition	●●●●○
Corrosion Resistance	●●●○○

CORE ATTRIBUTES

Product Name	Maxtech
Type	Wheel
Standard	EN12532 - Transport Equipment
Load capacity at 4 km/h	300 kg
Electric Conductive	No
Stainless	No
Load capacity Static	600 kg
Temperature range (Minimum)	-25 °C
Temperature range (Maximum)	80 °C
Overall weight	0.32 kg

© Copyright 2026 TENTE International GmbH

MAXTECH

UAR 125x38-Ø12

EAN 4031582323160

Order number 00030960

Product Drawings

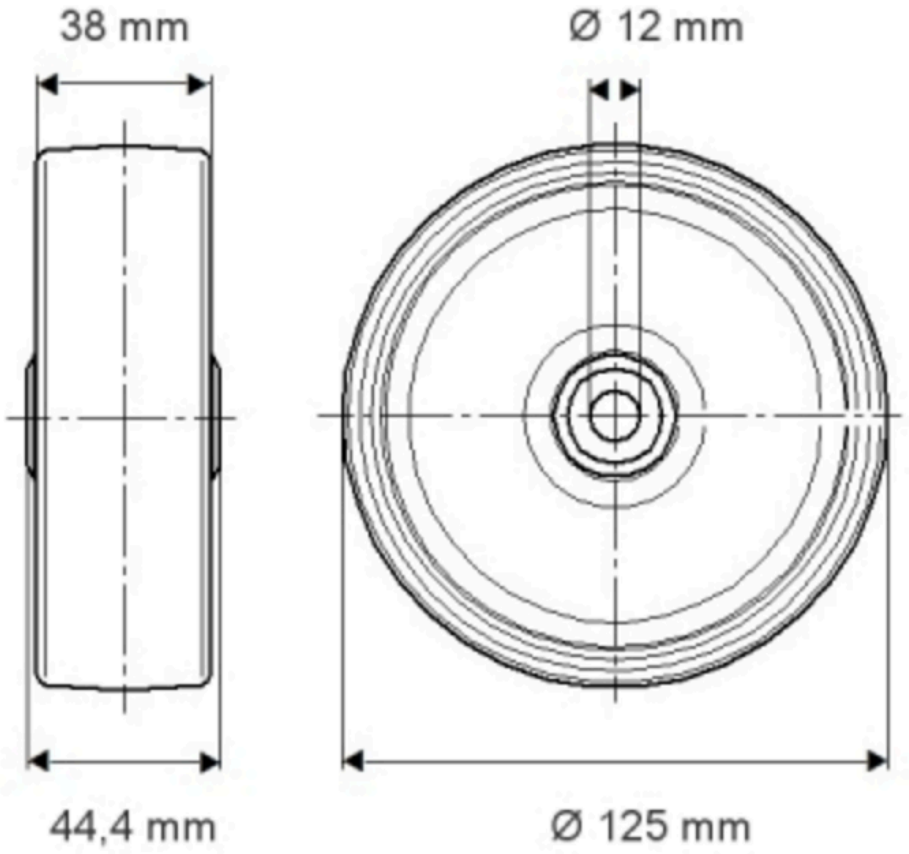

© Copyright 2026 TENTE International GmbH