E-DRIVE OPTIMA

EDOAUFF125P60

BETTER MOBILITY. BETTER LIFE.

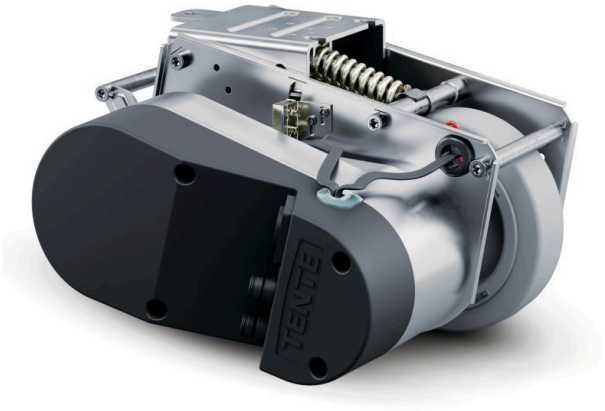

Image may differ from the original product

CORE ATTRIBUTES

Product name	E-Drive optima
Type	Drive Unit
Electric conductive	no
Stainless	no
Overall weight	16.01 lb
Length	Max. 315 mm (emergency release actuated)
Wheel diameter	125 mm, wear limit Ã˜ 115 mm
Wheel tread	Solid rubber, non-marking, Shore A 63
Wheel width	1.38 in
Width	9.09 in
Maximum thrust force	25
Maximum lifting force / contact pressure force	400
Height in home position	5.51 in
Installation height	6.69 in
Emergency release	Mechanical
Protection type	IPX4 (splash water from all sides, all plugs plugged in)
Permissible ambient temperature	Operating temperature 5 Â°C to 40 Â°C, air humidity 90 %, non-condensing
Weight	15.98 lb
Maximum speed	3.73 mph
Ground clearance	1.18 in
Ground unevenness (Minimum)	-0.59 in
Ground unevenness (Maximum)	0.59 in
Permissible storage temperature (Minimum)	14 °F
Permissible storage temperature (Maximum)	113 °F

© Copyright 2026 TENTE International GmbH

E-DRIVE OPTIMA

EDOAUFF125P60

BETTER MOBILITY. BETTER LIFE.

HOUSING

Housing Material	Electric
Fork shape	Drive

WHEEL

Body material	Polyamide
Tread material	Elastic tire, non-marking, vulcanized
Bearing	Flanged wheel
Diameter	4.92 in
Body width	1.38 in

FITTING

Fitting type	Rectangular plate

© Copyright 2026 TENTE International GmbH

E-DRIVE OPTIMA

EDOAUFF125P60

BETTER MOBILITY. BETTER LIFE.

Product Drawings

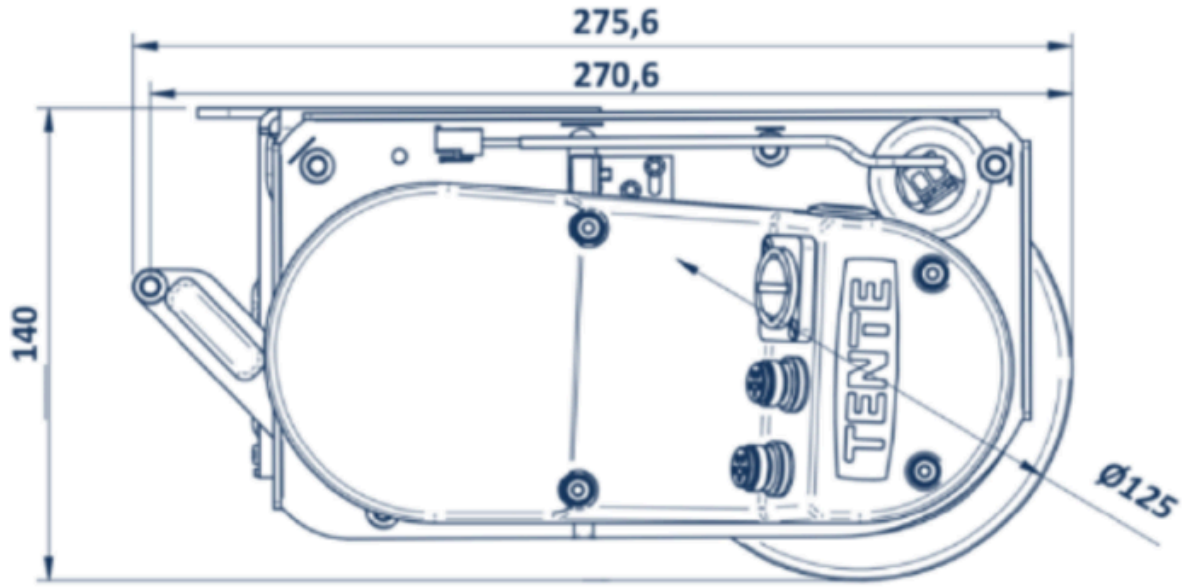

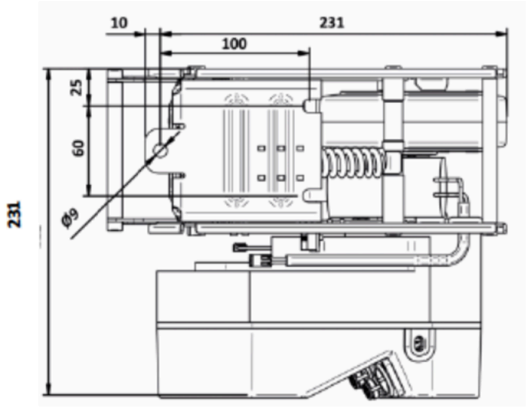

© Copyright 2026 TENTE International GmbH