PRODUCT INFORMATION

NOVATECH

FTF230x82-Ø45-5xØ14

EAN 4031582331974



Image may differ from the original product

PERFORMANCE

Roll Performance	●●●○○
Movement Noise	●●●○○
Attrition	●●●●○
Corrosion Resistance	●●●○○

CORE ATTRIBUTES

Product Name	Novatech
Type	Wheel
Electric Conductive	No
Stainless	No
Temperature range (Minimum)	-20 °C
Temperature range (Maximum)	60 °C
Overall weight	5.85 kg

WHEEL

Body material	Cast iron
Tread Material Mix	PUR casted premium
Bearing	Flanged wheel
Diameter	230 mm
Tread width	82 mm
Axle Hole Diameter	45 mm
Hardness of tread (A)	92 Shore A
Hole circle diameter	70 mm
Fitting hole diameter	14 mm
Suitable for	jungheinrich_mic

FITTING

Bolt mounting holes quantity	5

© Copyright 2026 TENTE International GmbH

NOVATECH

FTF230x82-Ø45-5xØ14

EAN 4031582331974

BETTER MOBILITY. BETTER LIFE.

Product Drawings

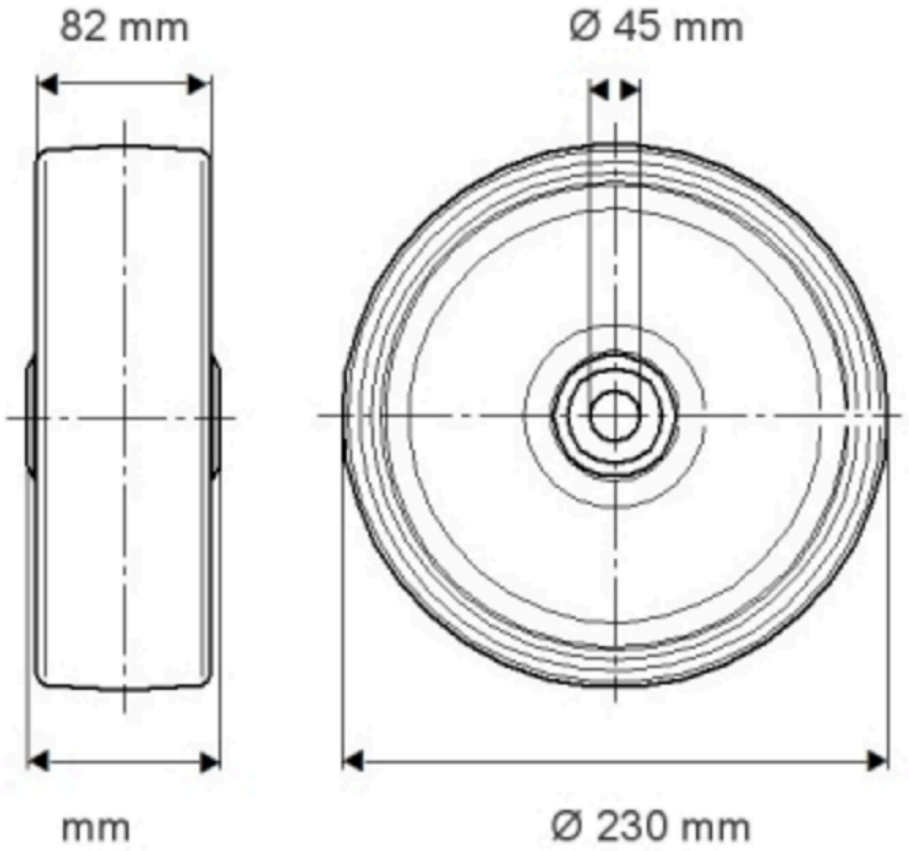

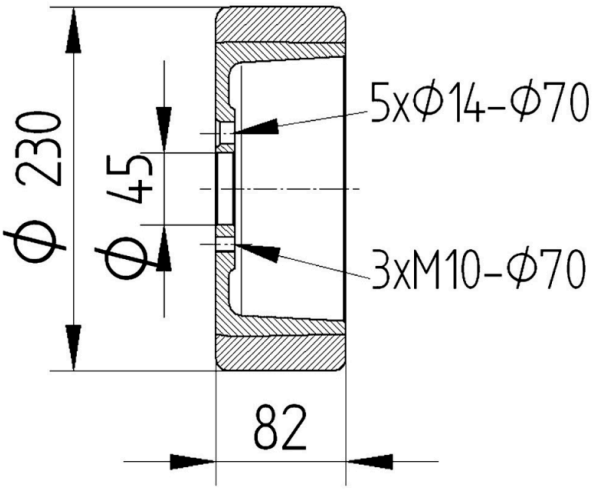

© Copyright 2026 TENTE International GmbH