PRODUCT INFORMATION

# LUMINA

## 5525UOI075L51-11 RAL9006

EAN 4031582310696



Image may differ from the original product

### PERFORMANCE

| | |
|---|---|
| Roll Performance | ●●●○○ |
| Movement noise | ●●●○○ |
| Attrition | ●●●●● |
| Corrosion resistance | ●●●●○ |

### CORE ATTRIBUTES

| | |
|---|---|
| Product name | Lumina |
| Type | Swivel caster with wheel brake |
| Standard | EN12528 - Furniture Castors |
| Load capacity at 1.8 mph | 220.46 lb |
| Electric conductive | no |
| Stainless | no |
| Load capacity Static | 440.92 lb |
| Temperature range (Minimum) | -4 °F |
| Temperature range (Maximum) | 140 °F |
| Overall height | 3.46 in |
| Overall width | 2.56 in |
| Overall weight | 0.65 lb |

### HOUSING

| | |
|---|---|
| Housing Material | Polyamide |
| Fork shape | Twin wheel housing, closed, with dome |
| Swivel bearing | Stem, swiveling |
| Housing Color | White aluminum (RAL9006) |
| Offset | 1.18 in |
| Swivel radius | 4.17 in |
| Swivel interference | 8.35 in |
| Dome diameter | 1.77 in |

### WHEEL

| | |
|---|---|
| Body material | Polyamide |
| Tread material | Identical with wheel body |
| Bearing | Plain bearing with spacer tube |
| Axle | Riveted |
| Threadguards | Without threadguard |
| Diameter | 2.95 in |
| Tread width | 0.39 in |
| Hardness of tread (D) | 75 Shore D |

### FITTING

| | |
|---|---|
| Fitting type | Blind hole for B10 fitting |
| Bolt hole diameter | 0.43 in |

© Copyright 2026 TENTE International GmbH

# LUMINA

5525UOI075L51-11 RAL9006

EAN 4031582310696

Order number 00073425

**Product Drawings**

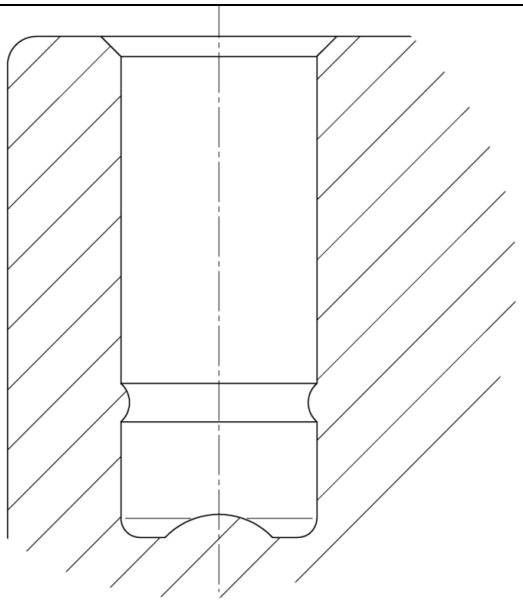

© Copyright 2026 TENTE International GmbH