PRODUCT INFORMATION

# MAXTECH EVO

## PBO200x48-Ø12 HL35 TFR

EAN 4031582400380



Image may differ from the original product

### PERFORMANCE

| | |
|---|---|
| Roll Performance | ●●●○○ |
| Movement noise | ●●●○○ |
| Attrition | ●●●○○ |
| Corrosion resistance | ●●●○○ |

### CORE ATTRIBUTES

| | |
|---|---|
| Product name | Maxtech evo |
| Type | Wheel |
| Load capacity at 1.8 mph | 88.18 lb |
| Electric conductive | no |
| Stainless | no |
| Load capacity Static | 176.37 lb |
| Overall weight | 0.77 lb |

### WHEEL

| | |
|---|---|
| Body material | Polypropylene |
| Tread material | Polyurethane, biosourced, injected |
| Bearing | Plain bearing |
| Threadguards | Without threadguard |
| Diameter | 7.87 in |
| Tread width | 1.89 in |
| Axle hole diameter | 0.47 in |
| Hub length | 1.34 in |

# MAXTECH EVO

PBO200x48-Ø12 HL35 TFR

EAN 4031582400380

BETTER MOBILITY. BETTER LIFE.

## Product Drawings

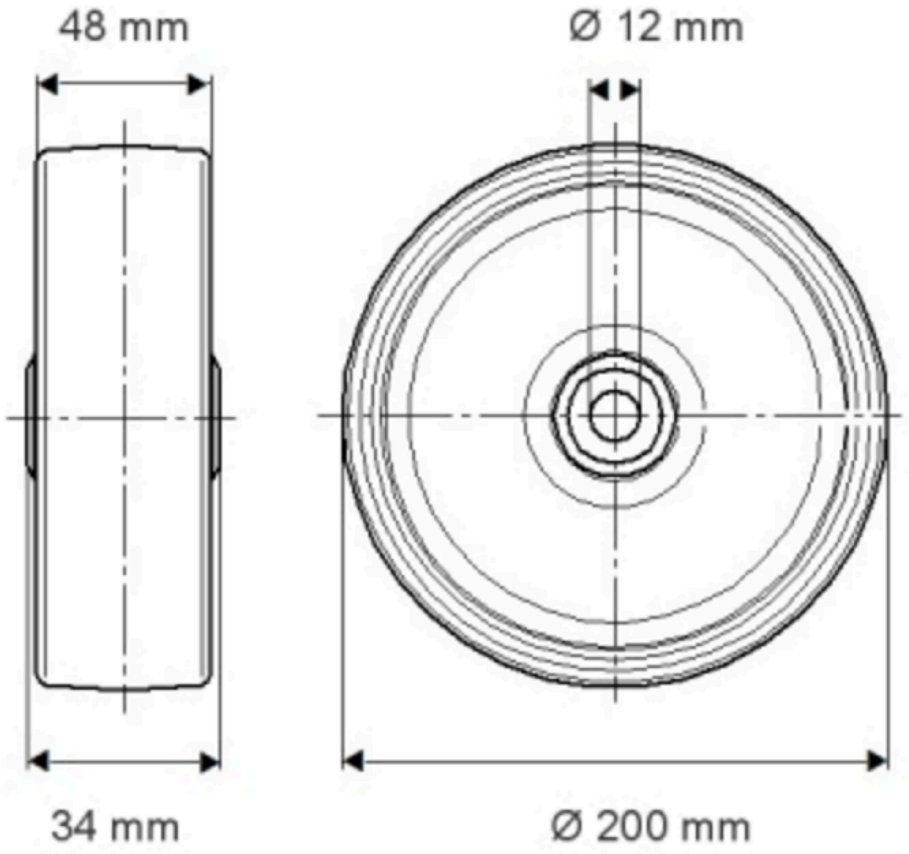


© Copyright 2026 TENTE International GmbH