PRODUCT INFORMATION

GALEA

5075PJP100P30-10

EAN 4031582379266



Image may differ from the original product

PERFORMANCE

Roll Performance	●●●●○
Movement Noise	●●●●○
Attrition	●●●●○
Corrosion Resistance	●●●○○

CORE ATTRIBUTES

Product Name	Galea
Type	Swivel castor with wheel brake
Standard	EN12530 - Devices Castors
Load capacity at 3 km/h	100 kg
Electric Conductive	No
Stainless	No
Load capacity Static	200 kg
Temperature range (Minimum)	-20 °C
Temperature range (Maximum)	60 °C
Overall Height	139 mm
Overall width	66 mm
Overall weight	0.48 kg

HOUSING

Housing Material	Polyamide
Fork shape	Closed
Swivel Bearing	Two ball races
Offset	40 mm
Swivel radius	128 mm
Swivel interference	256 mm
Dome diameter	59 mm

WHEEL

Body material	Polypropylene
Tread Material Mix	Thermoplastic rubber
Bearing	Precision ball bearing
Threadguards	With threadguard
Diameter	100 mm
Tread width	30 mm
Hardness of tread (A)	87 Shore A

FITTING

Fitting type	Bolt hole
Bolt hole diameter	10 mm

© Copyright 2026 TENTE International GmbH

GALEA

5075PJP100P30-10

EAN 4031582379266

BETTER MOBILITY. BETTER LIFE.

Product Drawings

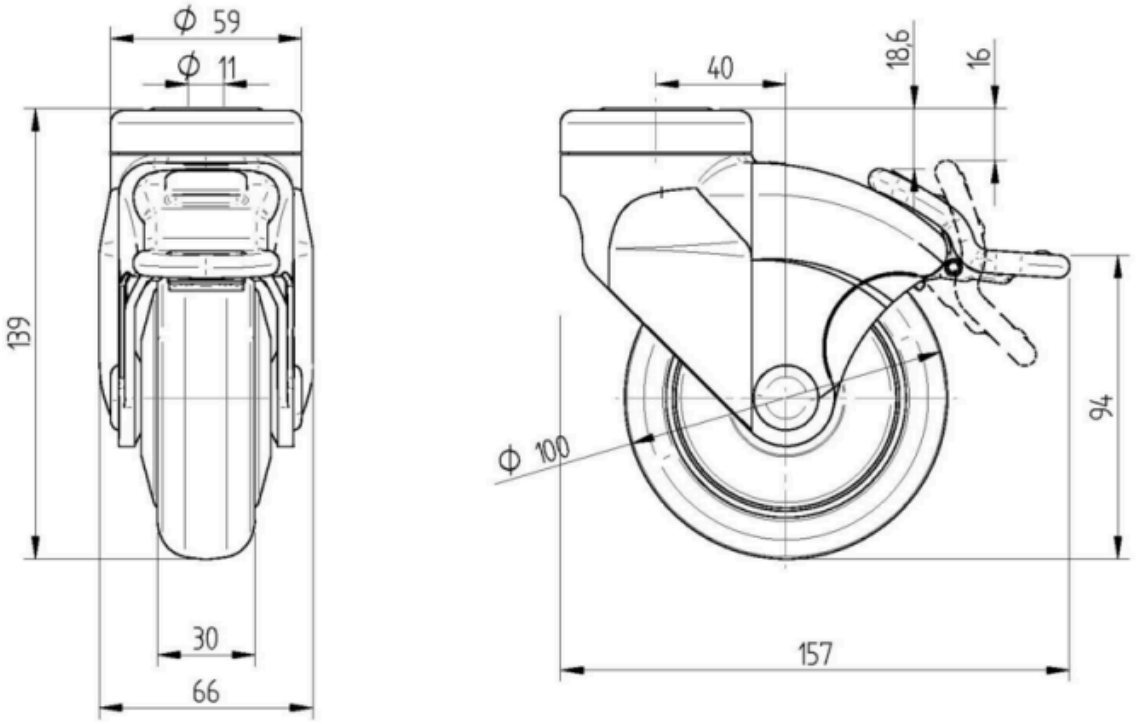

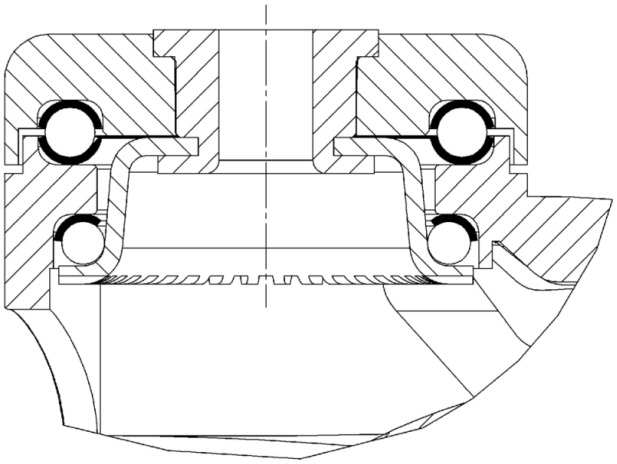

© Copyright 2026 TENTE International GmbH