PRODUCT INFORMATION

LINEA LOW HEIGHT

5945UAP100P30-8 LH RAL7001

EAN 4031582373073



Image may differ from the original product

PERFORMANCE

Roll Performance	●●●●●
Movement noise	●●●○○
Attrition	●●●●○
Corrosion resistance	●●●●○

CORE ATTRIBUTES

Product name	Linea low height
Type	Swivel caster with wheel brake
Standard	EN12530 - Devices Castors
Load capacity at 1.8 mph	220.46 lb
Electric conductive	no
Stainless	no
Load capacity Static	440.92 lb
Temperature range (Minimum)	14 °F
Temperature range (Maximum)	104 °F
Overall height	4.06 in
Overall width	2.87 in

HOUSING

Housing Material	Polyamide
Fork shape	Twin wheel housing
Swivel bearing	Precision ball bearing
Housing Color	Silver gray (RAL7001)
Offset	1.26 in
Swivel radius	4.02 in
Swivel interference	8.03 in
Dome diameter	1.61 in

WHEEL

Body material	Polyamide
Tread material	Polyurethane, injected
Bearing	Precision ball bearing
Threadguards	With threadguard
Diameter	3.94 in
Tread width	0.79 in
Hardness of tread (A)	92 Shore A

FITTING

Fitting type	Bolt hole
Bolt hole diameter	0.31 in

Deutscher Designer Club

Interzum Award

IF Design Award

© Copyright 2026 TENTE International GmbH

LINEA LOW HEIGHT

5945UAP100P30-8 LH RAL7001

EAN 4031582373073

BETTER MOBILITY. BETTER LIFE.

Product Drawings

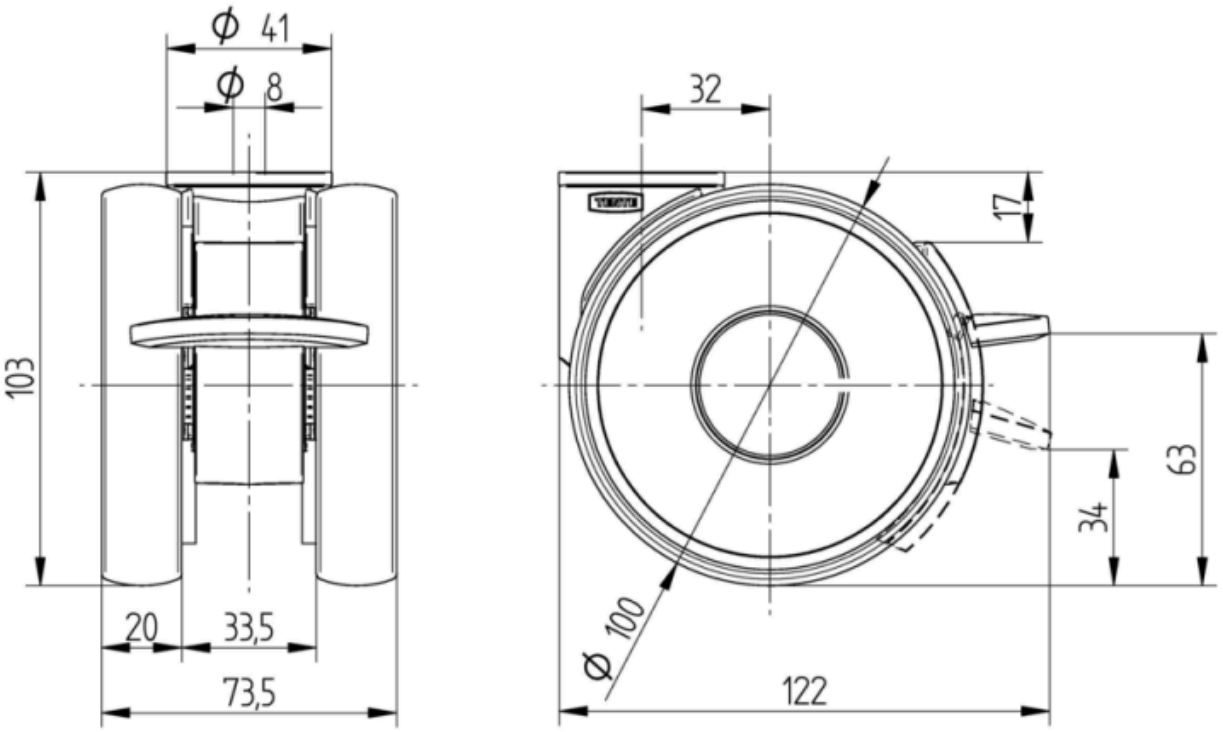

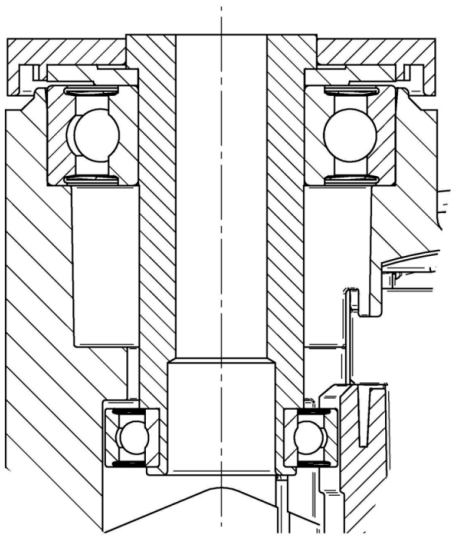

Deutscher Designer Club

Interzum Award

IF Design Award

© Copyright 2026 TENTE International GmbH