PRODUCT INFORMATION

KAPPA LOAD

9651ITP250P63 CL67

EAN 4031582314601



Image may differ from the original product

PERFORMANCE

Roll Performance	●●●●○
Movement Noise	●●●○○
Attrition	●●●●○
Corrosion Resistance	●●●●○

CORE ATTRIBUTES

Product Name	Kappa load
Type	Swivel castor with directional lock
Standard	EN12532 - Transport Equipment
Load capacity at 4 km/h	1000 kg
Load capacity at 6 km/h	800 kg
Electric Conductive	No
Stainless	No
Load capacity Static	2000 kg
Temperature range (Minimum)	-10 °C
Temperature range (Maximum)	60 °C
Overall Height	305 mm
Overall width	110 mm
Overall weight	6.1 kg

HOUSING

Housing Material	Iron forged, heavy
Fork shape	Broad, reinforced
Swivel Bearing	Deep-groove ball thrust roller bearing
Housing Color	Blue passivated
Offset	61 mm
Swivel radius	187.5 mm
Swivel interference	375 mm
Lubrication nipple	1
Dome diameter	111 mm

WHEEL

Body material	Aluminium
Tread Material Mix	PUR casted premium
Bearing	Precision ball bearing
Axle	Screwed with nut
Wheel Color	Honey yellow (RAL1005)
Threadguards	Without threadguard
Diameter	250 mm
Tread width	55 mm
Body width	55 mm
Hardness of tread (A)	92 Shore A
Hardness of tread (D)	42 Shore D

FITTING

Fitting type	Medium rectangular plate
Plate length	135 mm
Plate width	110 mm
Plate hole length (Minimum)	75 mm
Plate hole length (Maximum)	80 mm
Plate hole width (Minimum)	75 mm
Plate hole width (Maximum)	105 mm
Plate hole diameter	11 mm

© Copyright 2026 TENTE International GmbH

KAPPA LOAD

9651ITP250P63 CL67

EAN 4031582314601

Order number 00830357

Product Drawings

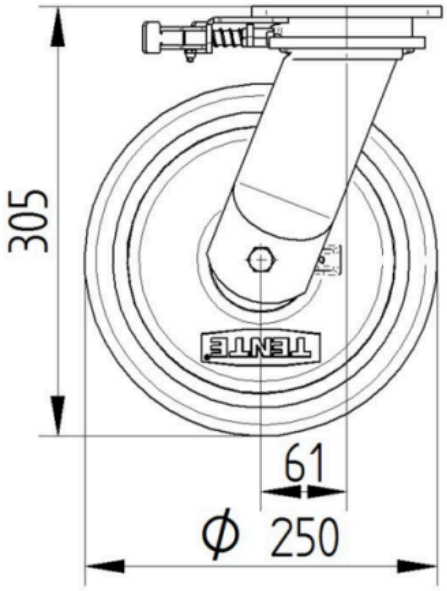

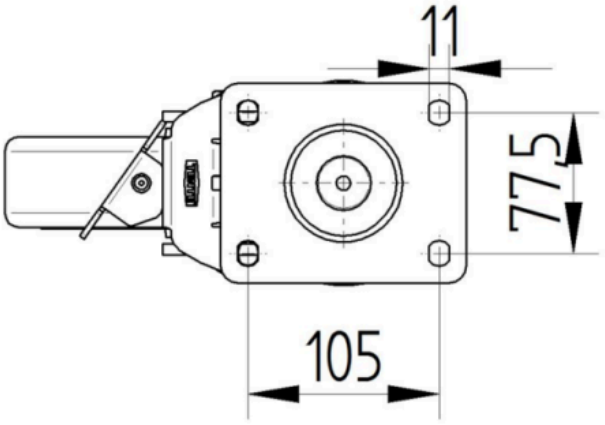

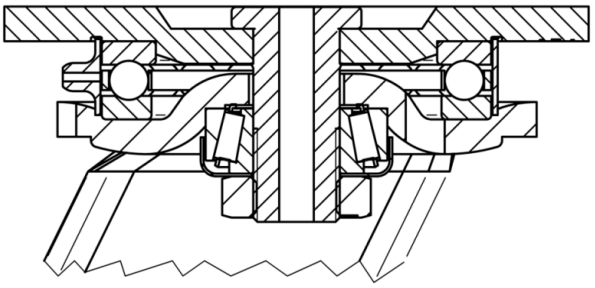

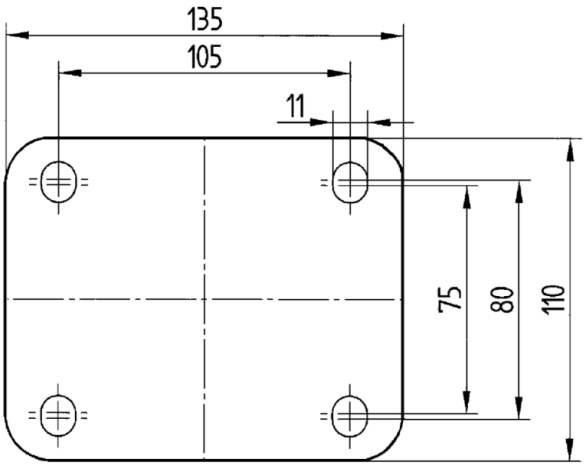

© Copyright 2026 TENTE International GmbH