PRODUCT INFORMATION

NOVATECH

ETP075x50-Ø25 HL50

EAN 4031582340136



Image may differ from the original product

WHEEL

Body material	Steel, iron
Tread Material Mix	PUR casted premium
Bearing	Precision ball bearing
Threadguards	With threadguard
Diameter	75 mm
Tread width	50 mm
Axle Hole Diameter	25 mm
Hub Length	50 mm
Hardness of tread (A)	92 Shore A
Bearing type	6005

PERFORMANCE

Roll Performance	●●●●○
Movement Noise	●●●○○
Attrition	●●●●○
Corrosion Resistance	●●●○○

CORE ATTRIBUTES

Product Name	Novatech
Type	Wheel
Load capacity at 3 km/h	550 kg
Electric Conductive	No
Stainless	No
Load capacity Static	1100 kg
Temperature range (Minimum)	-20 °C
Temperature range (Maximum)	60 °C

© Copyright 2026 TENTE International GmbH

NOVATECH

ETP075x50-Ø25 HL50

EAN 4031582340136

BETTER MOBILITY. BETTER LIFE.

Product Drawings

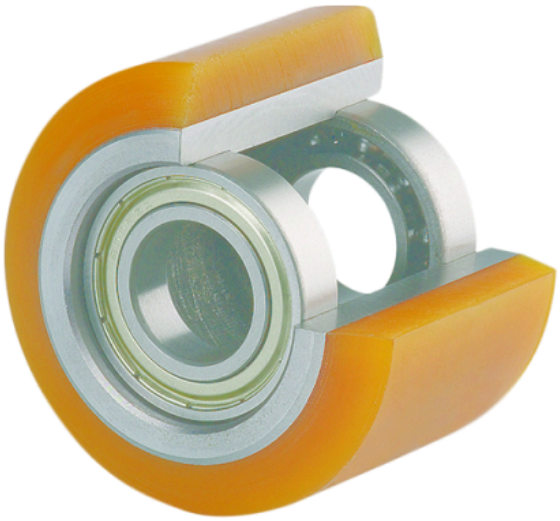

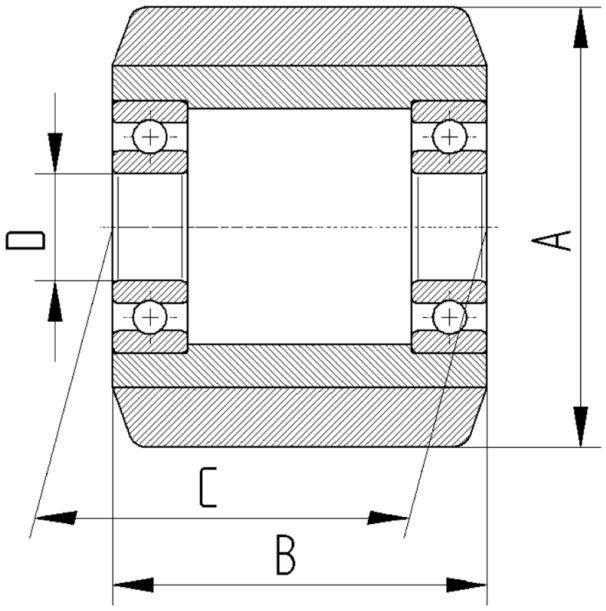

© Copyright 2026 TENTE International GmbH